COLLAPSABLE CHAIR

by
Marla Gaiser
Sheraz Bhatti
Sean Martin-Hamburger
Tobias Trübenbacher
Paula Schwager

PAST PRESENT

This class aims to investigate ways doing, making and being from our past to better create our future. The short project is a synthesis broader goal and is achieved through the specific investigation of an object,in our case a collapsible chair, and its incarnation throughout three various eras. The result is to find the advantages and disadvantages each incarnation offers before condensing the results into a vision of a future collapsible chair.

IMPRESSUM

University of the Arts Berlin
winter semester 2019 / 2020

Prof. Ineke Hans
KM Maciej Chmara

shortproject: »past-present«

INTRODUCTION

Collapsible chairs are commonly considered today as a chair which is cheap, low quality and is uncomfortable / unergonomic and intended for only short periods of time and in spaces that need lots of reorganizing. As a result, collapsible chairs are not often found in homes but are more commonly used in shared spaces that are often recognized / configured such as community halls, churches, schools and public plazas. This use only worsens the collapsible chair's image, with the customer unwilling to pay more for a collapsible chair than for a stackable, despite the fact that a collapsible chair often is more expensive to manufacture than the other.

Collapsible chairs are defined by having two states, passive (collapsed) and active (open / able to be sat on). The requirement of a flat collapsed state is often hard to combine with comfort and as the price needs to be low, despite the relatively advanced construction, the quality often suffers. They should take up as little space as possible but the thicker they are the higher are the demands on comfort. There can be no risk of trapping one's fingers. It should be intuitive to collapse and have a very stable active state. These goals are often more attainable through big folding movements as opposed to small movements, integrated components into the functionality while using as little of them as possible.

HISTORY

The collapsible chair like many products of today, was originally developed for military use. The chair begins its life as the chair of Kings and Generals and through its journey increasingly becomes accessible and common among all classes of society. The history of the chair dates back as far as 2000 – 1500 b.c when the Egyptians developed the collapsible stool as portable seating furniture for the commanding officers in the army. As a result, this piece of furniture was considered to be one of the most important pieces of furniture and a prized status symbol. During the

Greek era the chair was used as a part of everyday life, especially in the homes of families of high social status. The Egyptian folding stool (via the Greek and Etruscan) became the inspiration for “sella curulis”, the roman collapsible stool. During this period the chair was placed on a podium, a carriage being given high legs and a footrest in order to give the chair a more distinguished appearance. In the medieval age the collapsible stools was developed by multiplying the X shape in the z-direction giving a light and rigid chair. The collapsible chairs of the renaissance typically had curved legs inspired by the roman “sella curulis”. These were double curved, giving the

impression that the front X-shape was made out of one solid piece. During the 17th and 18th century the collapsible chair became part of the domestic furnishing. The collapsing chair became increasingly popular, and so did the collapsing variety and technical solutions. This led to a reduced status value of the chair, but also a wider span of uses and design solutions. By the 19th century the collapsible chairs were widely spread as flexible seating furniture for public spaces, outdoors (beach, picnics, etc) and more generally for those who were limited on space.

It was a symbol of authority and its development can be traced through numerous cultures up until today. The early collapsible stool consisted of two four-sided interlocking frames made of wood and a seat of leather. It was later developed into a chair with a backrest as can be seen on for example Tutankhamun's throne. (See Figure 7). It is not known if the Egyptians used the stool with the crossed legs facing forward or to the side. However during the Greek era the stool is depicted with the X placed laterally. The stool was no longer a stool only for commanders and emperors but was also used as a part of everyday life, especially in the homes of families of high social status. The Egyptian folding stool (via the Greek and Etruscan) became the inspiration for "sella curulis", the roman collapsible stool. (See Figure 8). The stool was now often placed on a podium, a carriage or given high legs and a footrest in order to give the chair a more distinguished appearance. A cushion was often used for increased comfort.

During the medieval age the collapsible stools was developed by multiplying the X shape in the z-direction. See Figure 9. This gave a light and rigid stool and at the same time armrests. Just before the renaissance (16th century) the folding chair grew more common. The collapsible chairs of the renaissance typically had curved legs inspired by the roman "sella curulis". These were double curved, giving the impression that the front X-shape was made out of one solid piece. During the 17th and 18th century the collapsible chair became part of the domestic furnishing. Due to the return of the baroque period's rich ornamentation, the chairs with crossed legs were not always

collapsible. During this period the X-structure had often exclusively symbolic value. The collapsing chair became increasingly popular, and so did the collapsing variety and technical solutions. This led to a reduced status value of the chair, but also a wider span of uses and design solutions. By the 19th century the collapsible chairs were widely spread as flexible seating furniture for public spaces that had a need for chairs that could be frequently rearranged.

THE TWELVE PRINCIPLES FOR COLLAPSIBILITY

Stress

The stress principle consists of compression and expansion through pressure and tension. Stress-pressure means that the compressed state is for storage and the relaxed is for action. Mollerup gives a sleeping bag as an example product. Stress-tension is the opposite, the stressed state is for action while the relaxed is for storage. Mollerups exemplifies with an elastic strap. This principle work with materials that have some degree of inherent flexibility

Folding

Folding is one of the most common principles of collapsibility, it requires a soft or partly soft material such as textile, rubber, paper or similar. An example of folding can be the easy folding of a napkin.

Creasing

Creasing is similar to folding but differs since it only takes place along predefined paths, or crea-

ses. Just as with folding this principle works with materials such as textiles, paper, plastic et cetera

Bellows

A lung-like collapsibility principle, represented in blacksmith‘s bellows. Airport gates that unfold over the airplane door also follow this principle.

Assembling

Assembling collapsibles can be seen in products which consists of several details which are in the passive state connected to each other but connects in more places in the active state. Tent pins which are connected with an elastic string are a good example of assembling collapsibles. They are in the passive state only connected by the string, enabling them to be stacked together to save space. In the active state they additionally connect with each other to form a new structure.

Hinging

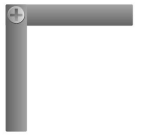

Connection of parts using flexible joints or different types of normal hinges, such as the ones used in piano lids and doors et cetera. This category also include single part flexible plastic hinges.

Rolling

Rolling as a collapsibility principle means that a product is reduced in size by being rolled up, a clear example of this can be found in camping carrymats.

Nesting

Nesting products are collapsed by putting their parts inside or next to each other, using their overlapping or cavities to save space. An example of this are a series of coffee-tables which due to their different sizes fit on top of each other to save space.

Sliding

Sliding means that a prosuct is reduced in size by parts sliding into each other. An example of this is a telescope fishing powl.

Fanning

Fanning means that a product’s parts are rotated out from a centre axis to create the expanded active state. Examples of this can be found in candle holders or Japanese hand fans.

PLIA CHAIR

MANUFACTURER	Castelli
DESIGNER	Giancarlo Piretti
YEAR	1967

DIMENSIONS

Pipe Profile: 20 mm x 10 mm
Wall thickness: 2 mm
Weight: 4.25 kg
Seat: Width: 41 cm, Depth: 41 cm, Height: 42 cm

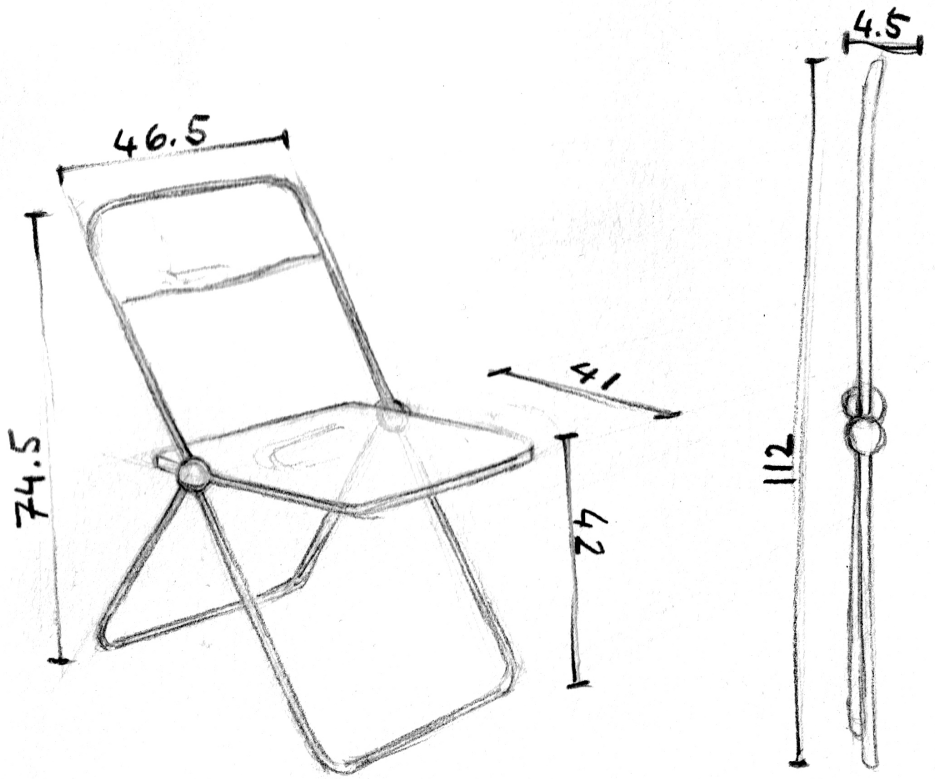

MANUFACTURING

Material:

1 chromed steel pipe seat back 2 chromed steel pipe backrest 3 back-seat Plexiglas 4 chromed steel pipe seat front 5/6 steel pipe legs 7 feet 8 plastic bolts 9 plastic sleeve 10 disc aluminium hinge

Manufacturing:

The chair is manufactured through through mass industrial and automated processes. The form of the frame is created through progressive bending. The seat and backrest are created through deep-drawn polypropylene. The hinge is the focal point both from a design and manufacturing perspective. It is a cast and machined 3 disc aluminium hinge that allows the movement of one plane (seatback, seat, legs) to move in conjunction with the others. The chair is extremely strong and well manufactured however this makes it nearly impossible to repair and or disassemble.

Sitting comfort:

The backrest and seat aged very poorly. The plastic not only was distorted in color but it was nearly impossible to find a chair with an intact seat that was not broken.

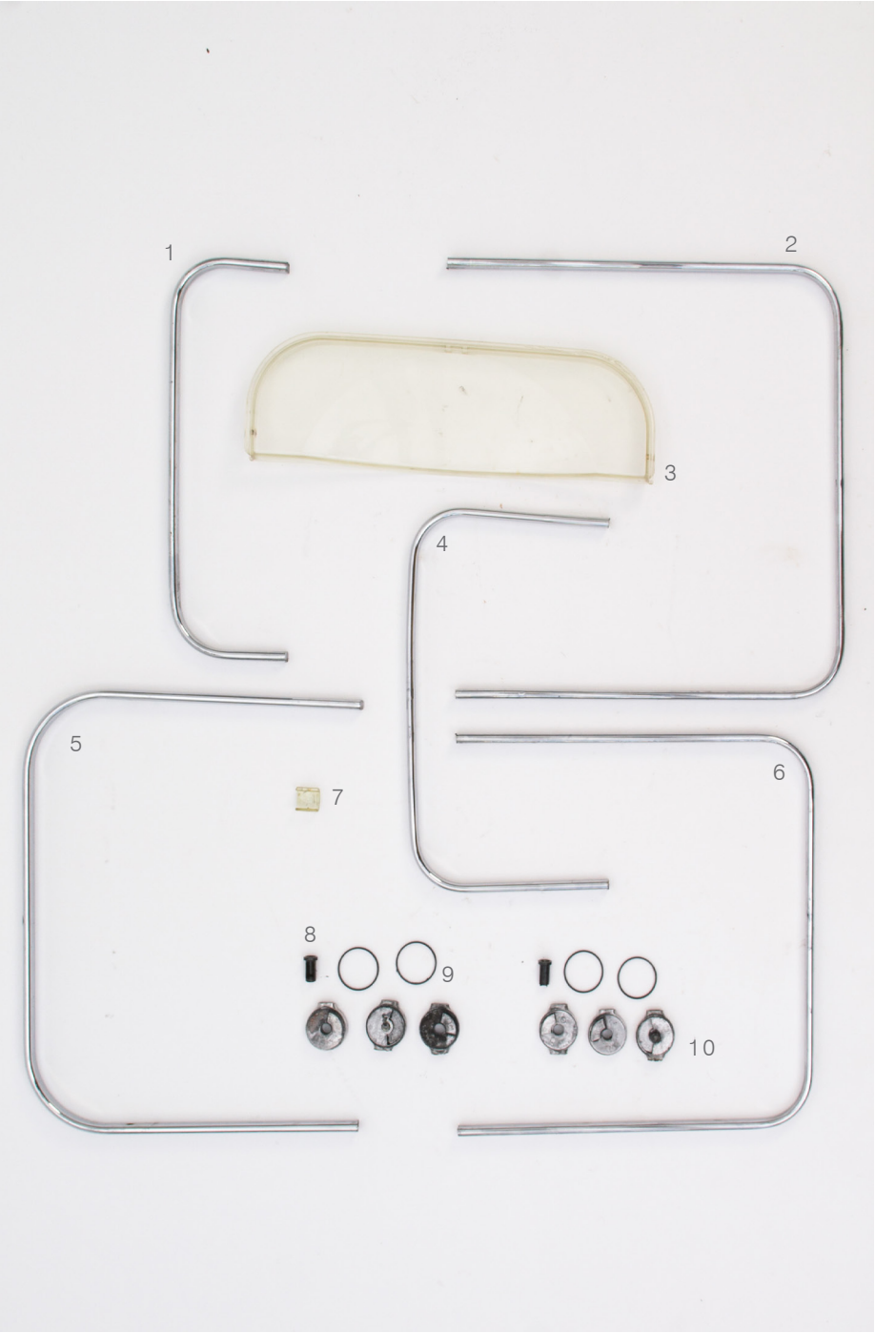

Negative Features:
The seat is the main negative element we could critique. However, equally valuable was the fact that the chair hing was pressed and thus could not be disassembled. In addition, the chair has an extremely costly prohibitive price and thus many users cannot see the benefit of the chairs space saving and mechanism.

Positive Features:
The Plia chair's overall manufacturing quality is extremely high. Itr is very enjoyable to handle and feels fully thought out. The hinge mechanism, which runs extremely smoothly, is completely hidden imparting confidence in the user that their fingers will not get pinched.

CORD CHAIR

MANUFACTURER	unknown
DESIGNER	unknown
YEAR:	1970s

DIMENSIONS

Pipe Profile: 21.0 mm
Wall thickness: 1.3 mm
Weight: 5.10kg
Seat: Width: 38cm, Depth: 38 cm, Height: 45cm

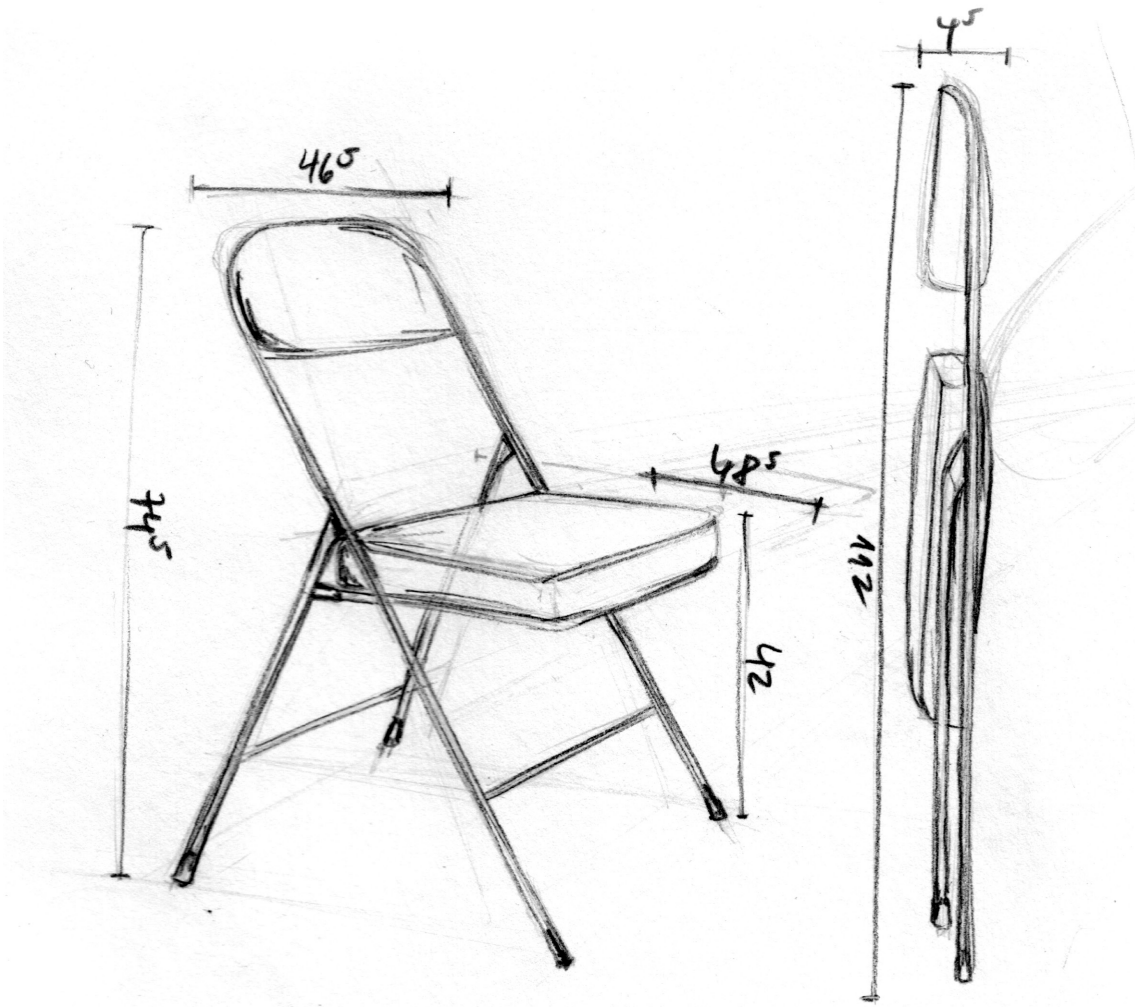

MANUFACTURING

Material:

1 cord overlay seat 2 cotton overlay underside seat 3 foam core seat 4 nails 5 foam core backrest 6/7 wood spacer 8 wood angels seat 9 braket 10 plywood part backrest 11 steel pipe beackrest + legs 12 wood frame seat 13 line straps seat 14 steel pipe seat 15 cord overlay backrest 16 steel pipe legs 17 screws 18 bolts 19 closing cap 20 plastic feet 21 hinge 22 washers

The production of this chair was most likely done in a low wage country such as Turkey, the DDR or in the Eastern Bloc. The chair's quality is equally poor with superficial rust and the seat cushion having lost its spring. The chair is made through difficult complex, manual combination from different component parts with irreversible connection comprised of bolts, nails and stitching.

Sitting comfort:

The polstery is an unusual component in the history of collapsable chairs. The different textiles and the combination of traditional polsteries offer a comfortable and soft sitting position. However, little attention is paid to the longevity of the upholstery when considering textile and foam choice.

Negative Features:
Apart from the aesthetics features being very different from today‘s standards the chair does not meet other needs that we deem necessary for a collapsible chair. Firstly, it is the heaviest and needs the most spaced when in the closed position. Additionally, due to its manufacturing, there are many component parts all of which are not easily replaceable crating a high factor for failure. This is not to mention its end of life process in which due to the vast amount of parts, materials and their complex connections make recycling very difficult.

Positive Features:
Despite the ware on the upholstery, the chair was the most comfortable to sit on and crafted the homeliest feel. Additional benefits crafted was a coniufence in the clocking system, one could both see and hear it. While the chair was also the heaviest, by its nature it felt the most sturdy and capable of supporting a human.

GUNDE CHAIR

MANUFACTURER	IKEA
DESIGNER	Knut und Marianne Hagberg
YEAR	2010

DIMENSIONS

Pipe Profile: 20 mm x 20 mm
Wall thickness: 1 mm
Weight: 2.17 kg
Seat: Width: 37 cm, Depth: 34 cm, Height: 45 cm

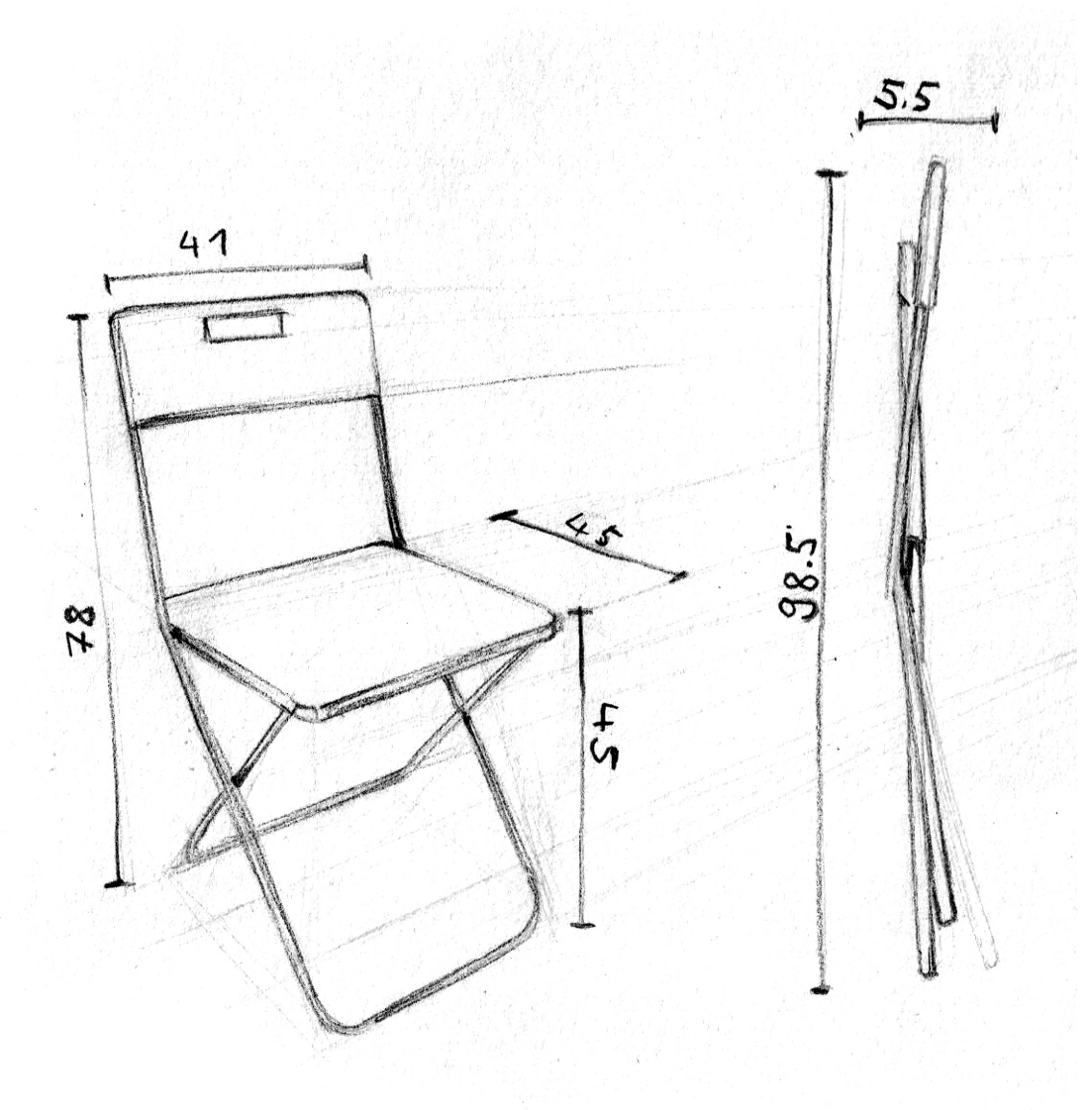

MANUFACTURING

Material:

1 galvanized steel pipe backrest + legs 2 polypropylen seat 3 galvanized steel pipe legs 4 polypropylen backrest 5 plastic washers 6 bolts 7 plastic feet 8 galvanized steel pipe seat

Manufacturing:

The chair is manufactured through through mass industrial and automated processes. The form of the frame is created through progressive deformation and compression, creating added strength. The seat and backrest are created through deep-drawn polypropylene. The hinge is created from bolts providing the pivote and the seat/frame creating a locking mechanism.The chair is easy to disassembly using only a hammer making it very possible to recycle.

Sitting comfort:

The backrest and seat are moderately flexible made of deep-drawn polypropylene.

Negative Features:
The frame is moderately unstable and moves left & right direction. Visually, the chair appears visually unbalanced and sterile.

Positive Features:
The Gunde chair is sold at an extremely low price, 6 euros, and is extremely low weight only 2.18kg. This feature is highlighted through an integrated handle in the backrest. Additionally, it is very easy to disassemble the chair and to add the chair is made without composites.

CONCLUSION

After we finished our examination we were left with a few main takeaways. The first is that over time there is a dramatic reduction in component parts. This ultimately means efficient manufacturing process and disassembly for post life usage. Another interesting aspect is that the seat and back panels became more and more integrated with the frame. This extended over time, in the case of the Ikea chair, that ultimately the whole chair creates the locking mechanism. The final observation is that the materials chosen seem to continue to be more robust, creating a longer usage period.

THE FUTURE

Every second our word population grows by around 2.6 people. This means 160 more humans per minute; 10,000 more in one hour; 250,000 per day. In the year 2030 there will be 43 more cities with more than 10 million inhabitants. The UN predicts that more than two thirds of our population will live in cities by 2050. As a consequence, humans live in increasingly less space in increasingly bigger cities while at the same time we use our apartments and rooms for more multifunctional and diverse purposes. This means new challenges for our homes and furnishings. In this regard, collapsible chair can be a tool to serve the unexpected. Sometimes one puts aside all the furniture for a dinner party, or to have space for yoga sessions, to play one's instrument or any other unexpected activity. There does not exist now distinct rooms and furniture for eating, working, cooking and playing anymore. Not only are our rooms are dynamically changing much more often but we too are changing where we live ever more frequently. Regardless of price point, aesthetic, or room, the future is one of mobility and city living where we demand the most from our spaces and demand a high degree of flexibility from our objects.

The collapsable chair has been traditionally thought of as a cheap alternative to a traditional chair with its most direct competitor being the stackable chair. In our vision of the

future, this dynamic continues and the collapsable chair demands its place with its unique and unrivaled benefits as compared to a stackable chairs. The first, being its dramatic space saving capabilities. This benefit is reflected from initial transport to end consumer usage. As compared to a stackable chair, the benefits are only seen once the unit total is so magnified to a point that an average consumer would never experience. The other downside of stackable chairs in that when being transported within a space, their are bulkier and more cumbersome to manipulate as compared to their collapsible counterparts. Additionally, stackable chairs demand a higher expectation of comfort and thus require more material used to achieve. .

In our view, the collapsable chair of the future must adapt from its current state. Collapsible chairs must have thinner and consistent profiles, such as the Castelli chair, in order to be truly convenient. In contrast, while the Ikea chair is extremely light and beautifully manufactured, it is actually curved when viewed in profile. While this may appear a minor detail, it provides bump in a consumer adopting and using it. The continued trend we have observed, that of a reduction of materials and parts, must be continued and extended to the margin such that the chair can be made from entirely recycled content and quickly in turn be recycled. This of course means less material variation and simplified connection to serve disassembly. This creates the added benefit of users being able to seamlessly replace broken parts, a problem we encountered with the Castelli chair, as we could not find a single replacement seat. This was very disappointing as the mechanics worked perfectly while being nearly 50 years old but now had to go to was due to the lack of a seat element.

The final task for a collapsible chair of the future to accomplish is to overcome its sense of cheapness and inability to integrate into its given environment. In this future, we believe the chair be made to be more integrated within the home. This means that it must take up as little space as possible but also that the aesthetics of the chair must be made compatible through form and material application to a traditional chair. Over the entire history of the collapsible chair it has been defined by archetypes, from the first scissor system of Egypt to the current canon, there has been little variation within each epoch. As a result, consumers have had very little choice to incorporate it into

their homes and thus have been reluctant to adopt such an object. What we see as the path forward is not a deviation of the goal, comfortable and easily storable furniture, but an alteration in the achievement. We need chairs that fold in different ways, made from a variety of materials and ultimately stand as distinct forms. These qualities must be adopted in order for the collapsible chair to be considered valuable and unique to be truly accepted by mass.

by

Sheraz Bhatti

Tobias Trübenbacher

Sean Martin-Hamburger

Paula Schwager

Marla Gaiser

short time project PAST PRESENTS Prof Ineke Hans/ KM Maciej Chmara